BM GROUP	**TECHNICAL SHEET**	No. **41MA11A**
		Issue **V01.0 (EN)**

Product family: Terminal blocks - Multiway in nylon

Code: 963T

Description: ACCESSORIES FOR 963/963CS AND M092, M093, M094 SERIES · FORK TERMINAL FOR GROUNDING

Image:

Technical Drawing:

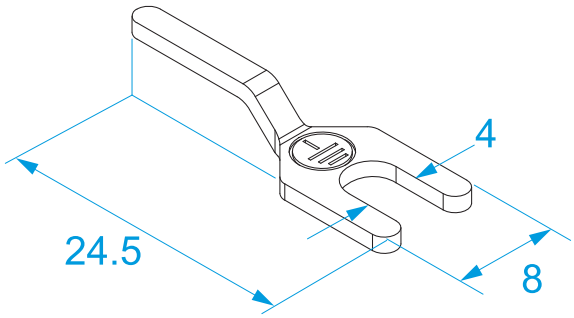

Specifications:

Code	Description	
963T	Fork terminal for grounding	100/1000