BM GROUP	**TECHNICAL SHEET**	No. **41MA11B**
		Issue **V01.1 (EN)**

Product family: Terminal blocks - Multiway in nylon

Code: 933, 935

Description: ACCESSORIES FOR M093 SERIES · PROTECTION COVERS · FROM 3 TO 5 WAYS

Image:

Technical Drawing:

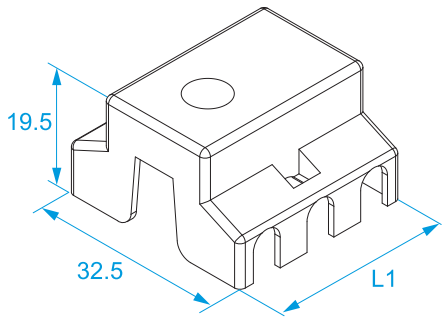

Specifications:

INSULATING HOUSING:	polyamide (PA 6.6) natural color UL 94 V2
MAX OPERATING TEMPERATURE:	110 °C
ASSEMBLY:	Snap onto M093 series terminal block or fasten with M3 screw through the through hole on the cover and terminal block.
WAYS:	5

Code	Terminal block ways	Color	L1 (mm)	
933	2-3	Natural	30	1000/1000
935	4-5	Natural	50	500/500

HALOGEN FREE